DocuSign Envelope ID: 53E45841-7DA3-4C23-B6E0-E1A0E02711FFD

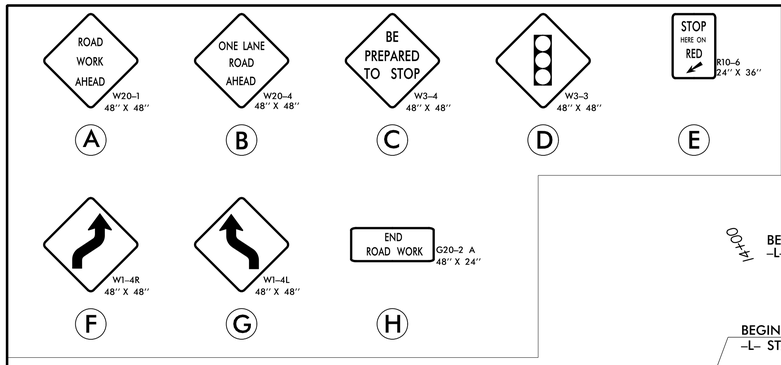

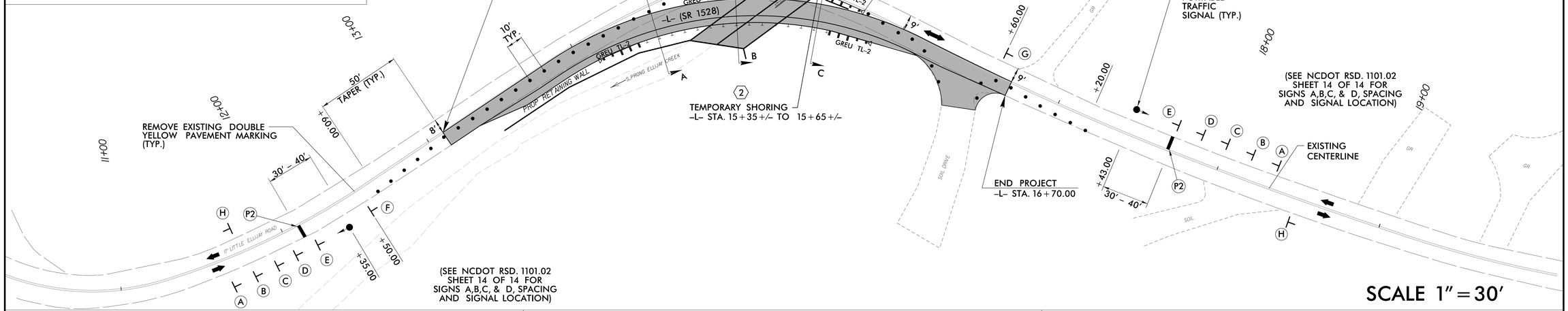

(SEE NCDOT RSD. 1101.02 SHEET 14 OF 14 FOR SIGNS A,B,C, & D, SPACING AND SIGNAL LOCATION)

SCALE 1" = 30'

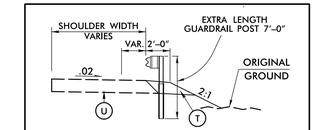

EXTRA LENGTH GUARDRAIL POST DETAIL

-L- STA. 14+80 LT TO 15+75 LT

* FOR NARROW WIDENING, USE IN CONJUNCTION WITH PAVEMENT SCHEDULE PROVIDED IN TYPICAL DETAIL 8

** CONTRACTOR SHALL VERIFY BREAKPOINT FOR APPLICABILITY

PROJ. REFERENCE NO.	SHEET NO.
B-6028	TMP-4

STV 100 Years — STV Engineers, Inc. 900 West Trade St., Suite 715 Charlotte, NC 28202 NC License Number F-0991

BRIDGE #550150

***EXTRA LENGTH POSTS REQUIRED FOR TEMPORARY GUARDRAIL

NAD 83 NA 2011

SECTION A-A

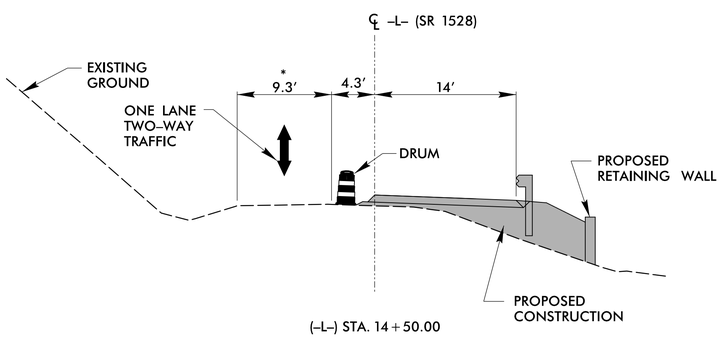

* NOTE: EXISTING PAVEMENT WIDTH IS 16'. PAVEMENT WILL BE LESS THAN 9' ALONG PROPOSED TAPER.

N.T.S

SECTION B-B

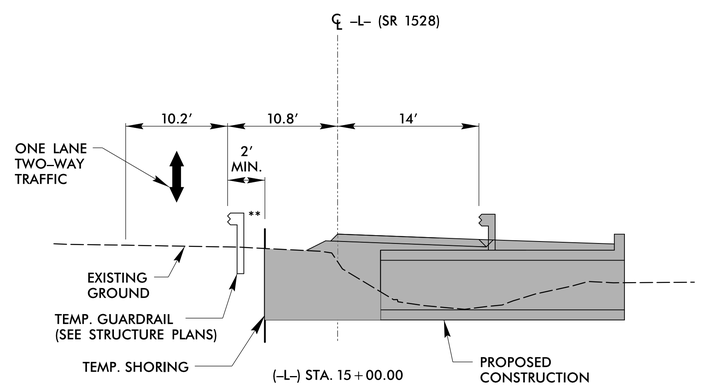

** NOTE: TEMPORARY GUARDRAIL WILL BE ATTACHED TO EXISTING BRIDGE.

N.T.S

SECTION C-C

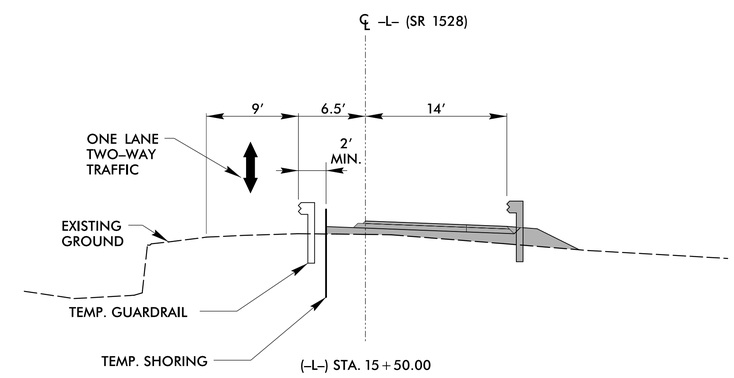

N.T.S

APPROVED: DocuSigned by: Nikki T. Honeycutt E8E3E4EA0F44473...

DATE: 12/6/2021

SEAL

NORTH CAROLINA PROFESSIONAL SEAL 039234 ENGINEER NIKKI T. HONEYCUTT

DIVISION OF HIGHWAYS STATE OF NORTH CAROLINA DEPARTMENT OF TRANSPORTATION WORK ZONE TRAFFIC CONTROL

DOCUMENT NOT CONSIDERED FINAL UNLESS ALL SIGNATURES COMPLETED

PHASE I DETAILS

11/11/2021
R:\Traffic\TrafficControl\TCP\TCP Sheets\17BP.14.R.157_TCP_SHT_4.dgn
saucteSL