DocuSign Envelope ID: 53E45841-7DA3-4C23-B6E0-E1A0E0271FFD

PROJ. REFERENCE NO.	SHEET NO.
B-6028	TMP-5

STV 100 Years — STV Engineers, Inc. 500 West Trade St., Suite 715 Charlotte, NC 28202 NC License Number F-0991

NAD 83 NA 2011

BRIDGE #550150

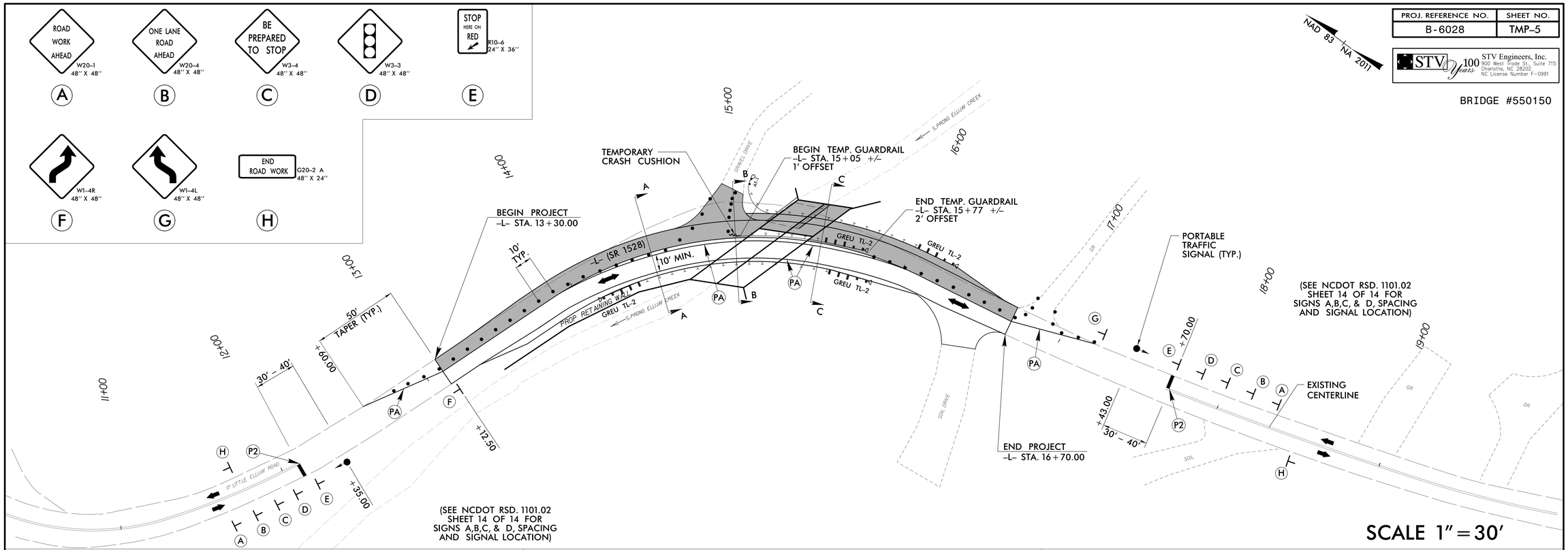

(SEE NCDOT RSD. 1101.02 SHEET 14 OF 14 FOR SIGNS A,B,C, & D, SPACING AND SIGNAL LOCATION)

SECTION A-A

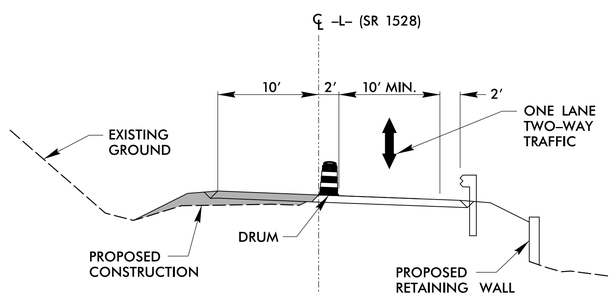

(-L-) STA. 14+50.00

N.T.S

SECTION B-B

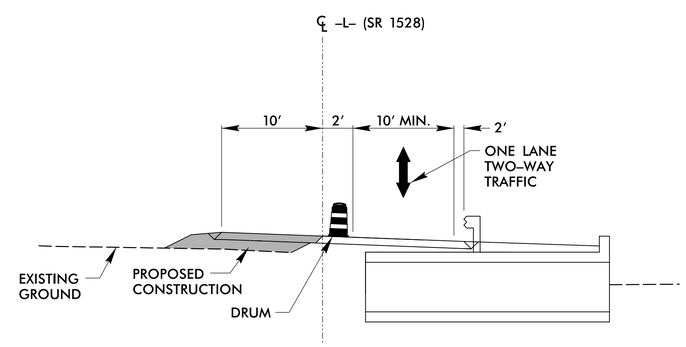

(-L-) STA. 15+00.00

N.T.S

SECTION C-C

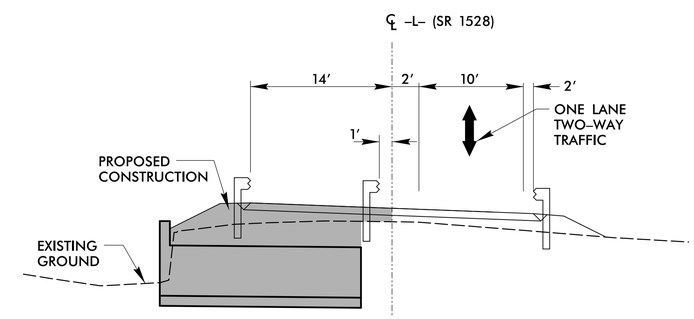

(-L-) STA. 15+50.00

N.T.S

APPROVED: DocuSigned by: Nikki T. Honeycutt E8E3E4EA0F44473...

DATE: 12/6/2021

SEAL

NORTH CAROLINA PROFESSIONAL SEAL 039234 ENGINEER NIKKI T. HONEYCUTT

DIVISION OF HIGHWAYS STATE OF NORTH CAROLINA DEPARTMENT OF TRANSPORTATION WORK ZONE TRAFFIC CONTROL

DOCUMENT NOT CONSIDERED FINAL UNLESS ALL SIGNATURES COMPLETED

PHASE II DETAILS

11/11/2021
R:\Traffic\TrafficControl\TCP\TCP Sheets\17BP.14.R.157_TCP_SHT_5.dgn
saucteSL