DocuSign Envelope ID: 53E45841-7DA3-4C23-B6E0-E1A0E0271FFD

STV 100 Years
STV Engineers, Inc.
900 West Trade St., Suite 715
Charlotte, NC 28202
NC License Number F-0991

PROJECT REFERENCE NO.	SHEET NO.
B-6028	2A-1
R/W SHEET NO.	

ROADWAY DESIGN ENGINEER

DocuSigned by: MICHAEL CARD JR. HONEYCUTT III
DOCUSIGN PROFESSIONAL ENGINEER SEAL
SEAL 039234
ENGINEER
MICHAEL T. HONEYCUTT
11/8/2021
DocuSign Envelope ID: 1B0C1F8D-D8F44473-

PAVEMENT DESIGN ENGINEER

PAVEMENT DESIGN PROVIDED BY NCDOT

DOCUMENT NOT CONSIDERED FINAL UNLESS ALL SIGNATURES COMPLETED

	PAVEMENT SCHEDULE
C1	PROP. APPROX. 3″ ASPHALT CONCRETE SURFACE COURSE, TYPE S9.5C, AT AN AVERAGE RATE OF 168 LBS. PER SQ. YD. IN EACH OF TWO LAYERS.
C2	PROP. VAR. DEPTH ASPHALT CONCRETE SURFACE COURSE, TYPE S9.5C, AT AN AVERAGE RATE OF 112 LBS. PER SQ. YD. PER 1″ DEPTH. TO BE PLACED IN LAYERS NOT TO EXCEED 1.5″ IN DEPTH.
E1	PROP. APPROX. 5.5″ ASPHALT CONCRETE BASE COURSE, TYPE B25.0C, AT AN AVERAGE RATE OF 627 LBS. PER SQ. YD.
E2	PROP. VAR. DEPTH ASPHALT CONCRETE BASE COURSE, TYPE B25.0C, AT AN AVERAGE RATE OF 114 LBS. PER SQ. YD. PER 1″ DEPTH. TO BE PLACED IN LAYERS NOT LESS THAN 3.0″ IN DEPTH OR GREATER THAN 5.5″ IN DEPTH.
T	EARTH MATERIAL
U	EXISTING PAVEMENT
W	PAVEMENT WEDGING

ALL PAVEMENT SLOPES ARE 1:1 UNLESS SHOWN OTHERWISE.

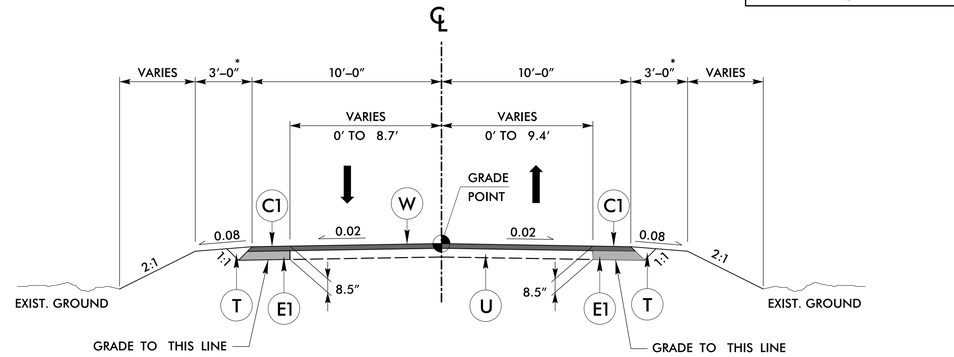

* 7′–0″ WITH GUARDRAIL

TYPICAL SECTION 1

–L– STA. 13+30.00 TO 14+00.00
–L– STA. 15+90.00 TO 16+70.00

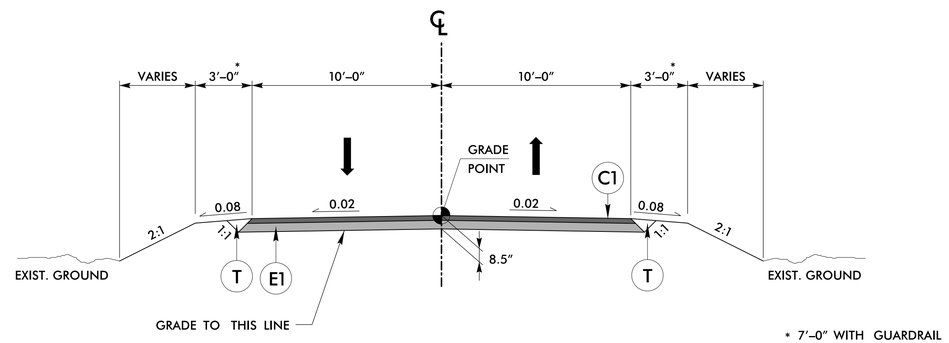

* 7′–0″ WITH GUARDRAIL

TYPICAL SECTION 2

–L– STA. 14+00.00 TO 15+06.75 (BEGIN CULVERT)
–L– STA. 15+41.56 (END CULVERT) TO 15+90.00

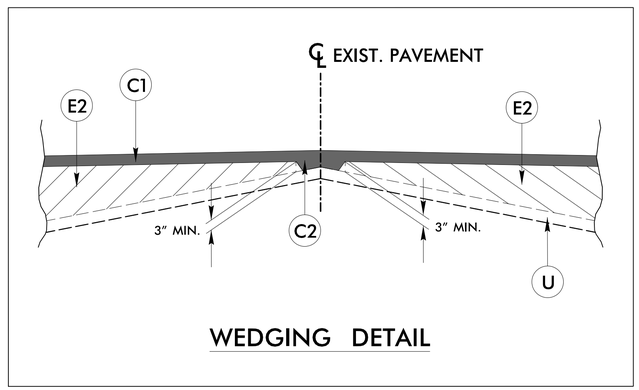

WEDGING DETAIL

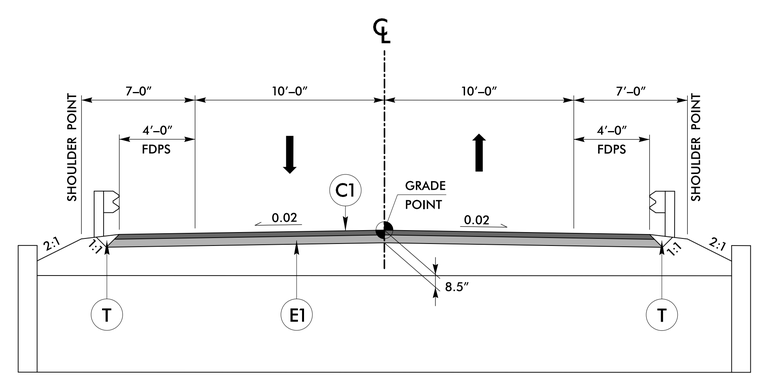

TYPICAL SECTION 3

–L– STA. 15+06.75 (BEGIN CULVERT) TO 15+41.56 (END CULVERT)

11/11/2021
R:\Roadway\Proj\SHT\TBP14R157_rdy_psh02A_typ.dgn
SauciesL